RaDIATe/BLIP
Status of irradiation campaign of Ir, TZM, Si and Graphite-SiC coated samples

16th June 2016

CERN | EN ENGINEERING DEPARTMENT

Outline

- Update on Heavy Capsule (Ir/TZM)
- Update on Low Density Capsule (Si/Graph-Coated/Sigraflex)
- Update on Specimens Shape
- Conclusions

Heavy Capsule (Ir/TZM)

- Request from meeting 4th May
  - Review of material filler or find a solution to get uniform energy losses
  - Review thermal contact conductance of Graph-SS, Graph-Samples

- Other minor changes in the design has been done as well

Request 1. Getting uniform energy

- After some integrations; Most simple solution is to:
  - **Add a SS thicker mask on the vacuum degrader consistent with the geometry of the graphite filler.**

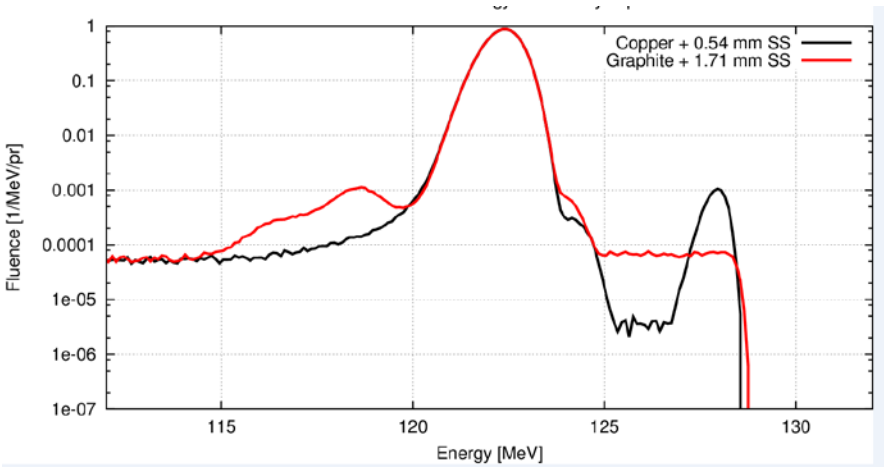

- **1.71 mm thickness SS mask**

Question: Who manufactures it?

- **We keep graphite as filler material**
- High density Samples&Capsule will be <u>rotationally fixed</u> in an <u>unequivocal</u> position

Current design of Heavy Capsule

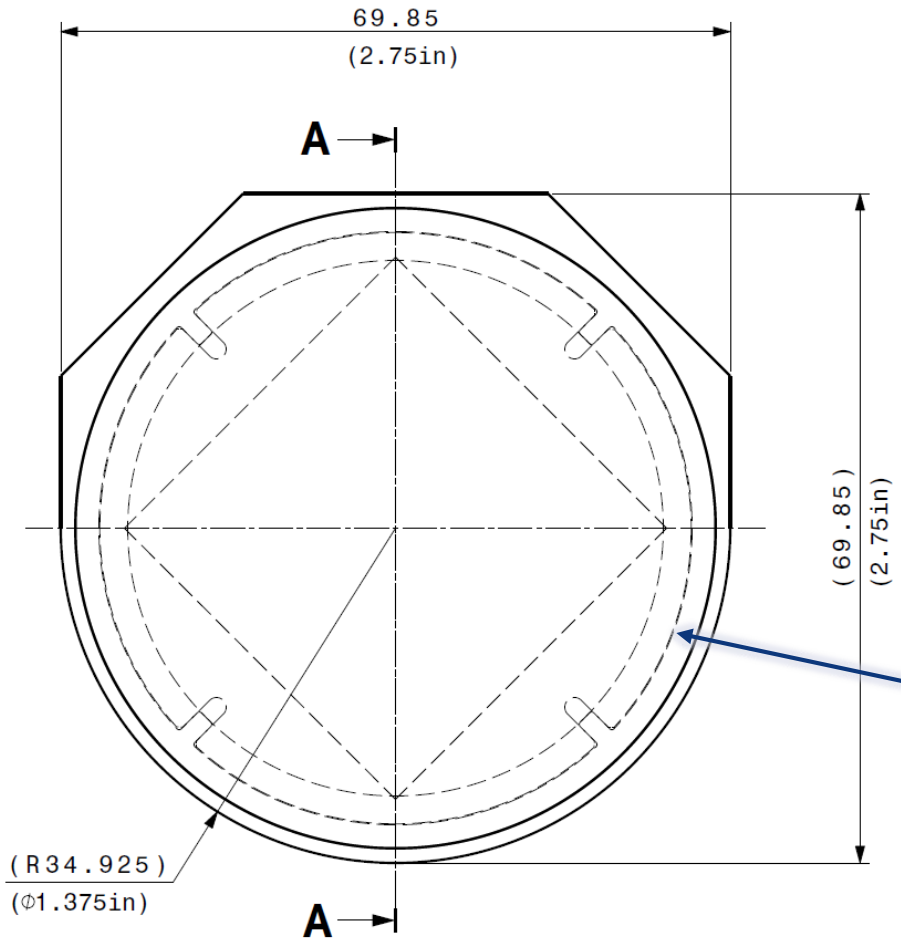

- Upper part of external SS capsule is reshaped. (avoids its rotation)
- Inner filler is rotationally fixed to the SS Capsule using 4 pins.
- 45º inclination of samples and pins ensures better centering with thermal expansion
- Vacuum radial Gap between filler and SS is reduced from 1.6 mm to 0.2 mm

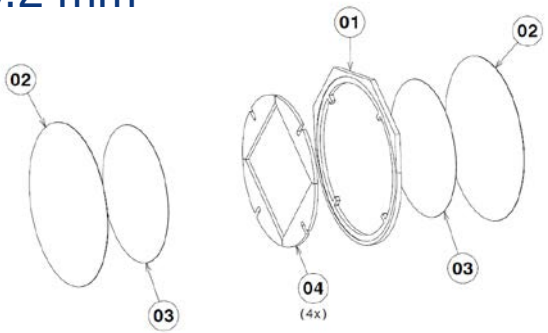

CERN Capsule design – thermal expansion

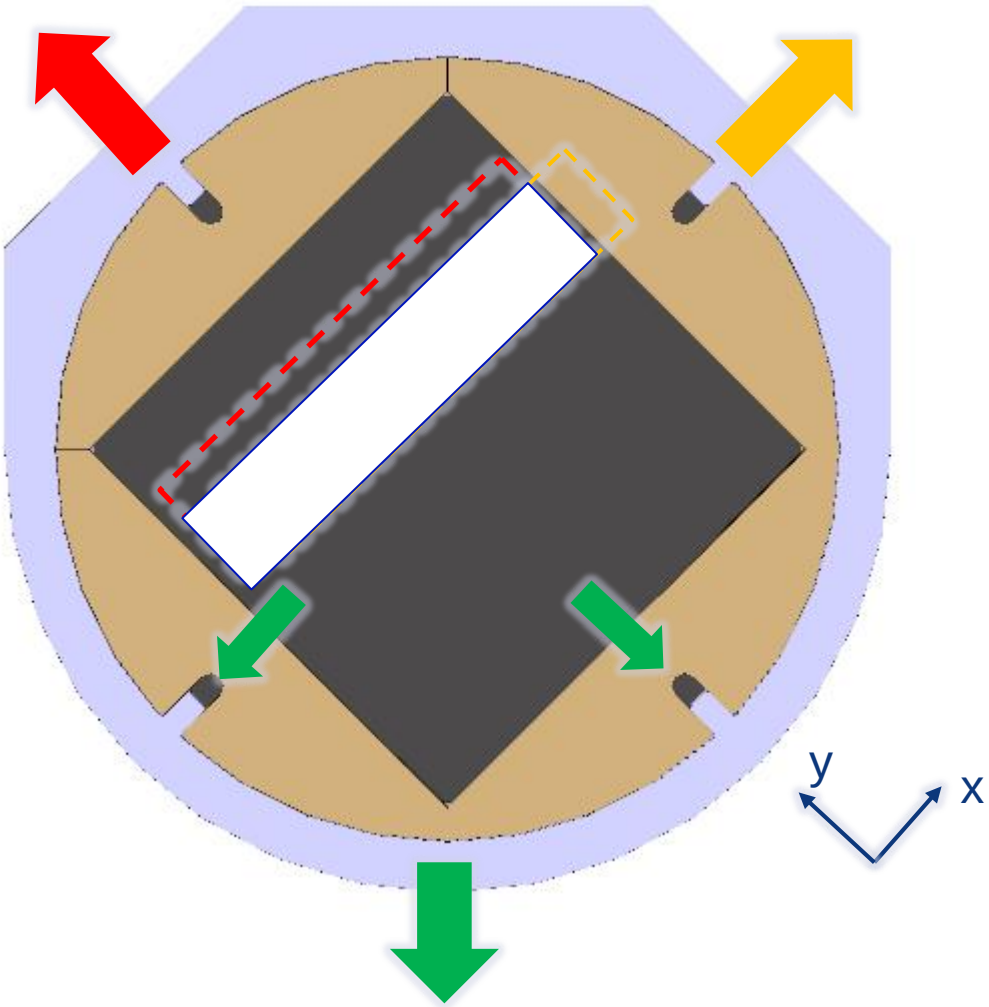

- Samples and filler are rotated by 45° deg in order to ensure centering of samples with thermal expansion
- Green arrows: gravity
  Orange arrow: thermal expansion in x
  Red arrow: thermal expansion in y
- Gap between graphite and SS to be adjusted to the thermal expansion

Other changes in the Heavy Capsule

- Addition of 2 x 0.1 mm thickness PGS Graphite sheets between samples and SS windows.

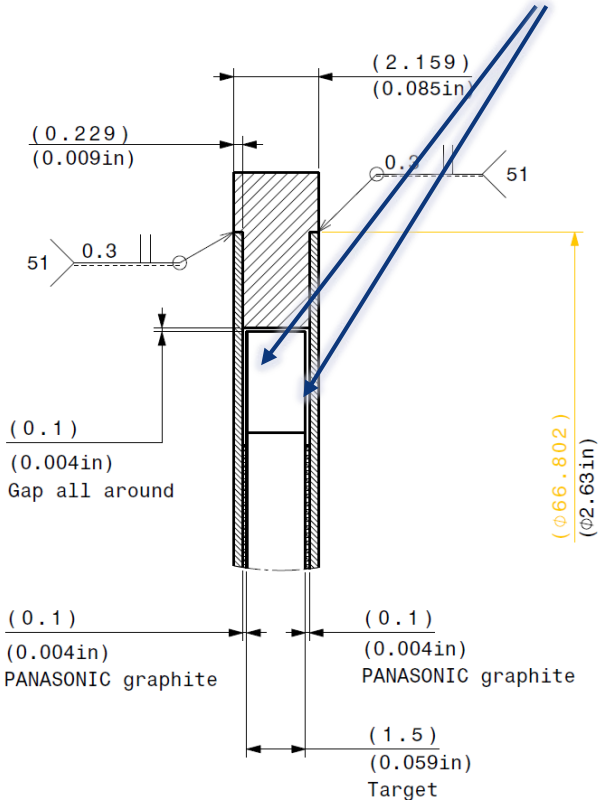

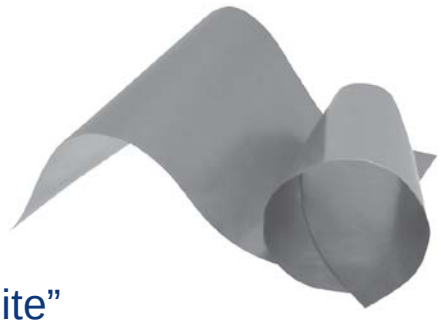

- "Flexible graphite"
- Low density (0.85 gr/cm3)
- Thermal conductivity 700 W/mK
- E= 0.2 GPa

- We expect to improve considerably the thermal contact conductance (>5000 W/m2K)

- We can check as well behavior of this material under radiation.

Current total thickness of the capsule is 2.159 mm

Update on thermomechanical calculations

- Graphite TCC was reduced to 1500 W/m2k

Max temperature SS window = 120 ºC

Max HF = 50 W/cm2

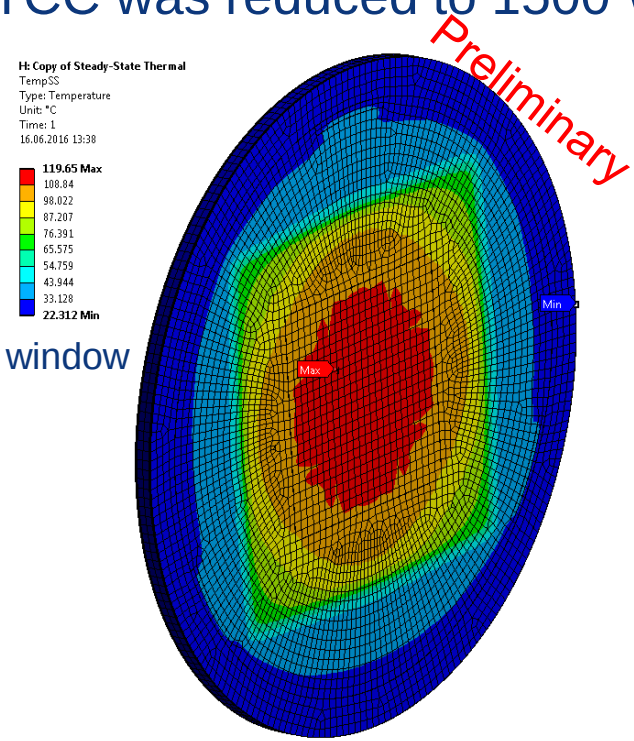

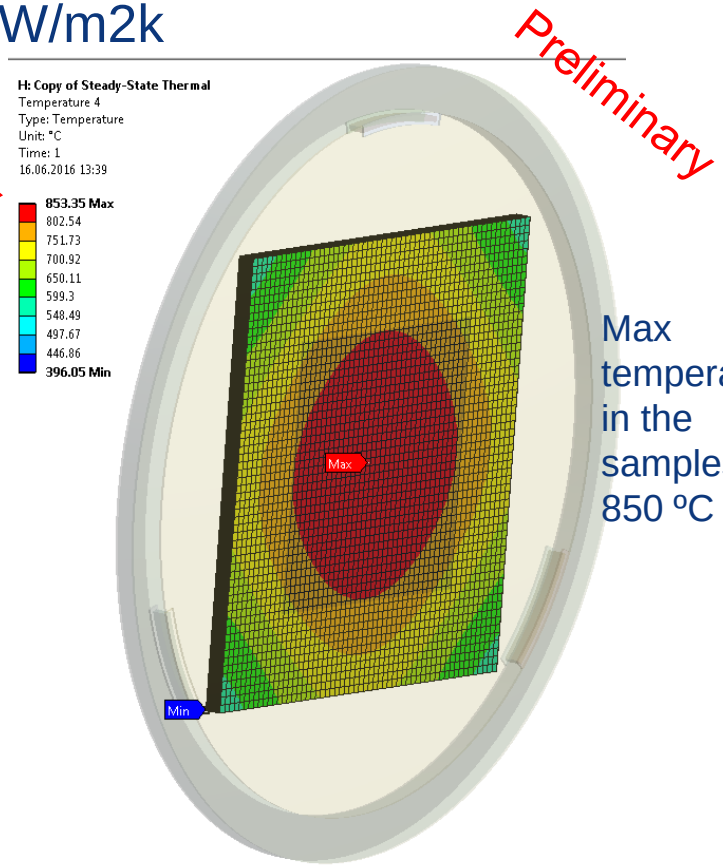

Max temperature in the samples = 850 ºC

- Calculations with updated geometry (reduced radial gap+ PGS graphite sheets) still on going… Temperature will be certainly reduced!

Low Density Capsule (Si/Graph-SiC/Sigraglex). Update of the geometry:

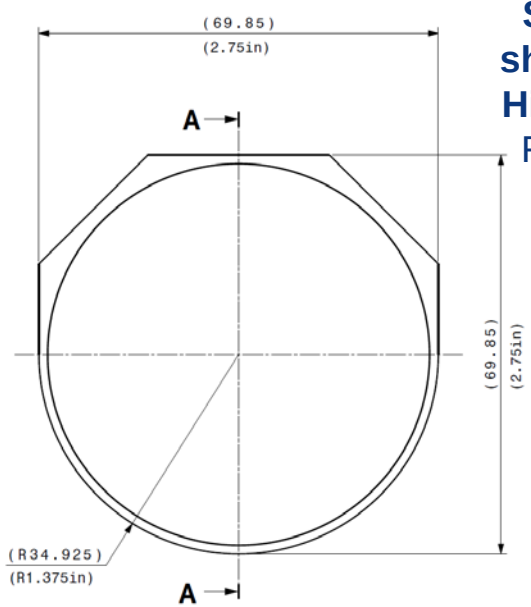

SS external capsule shape the same as the High Density Capsule. For simplicity. It's that OK?

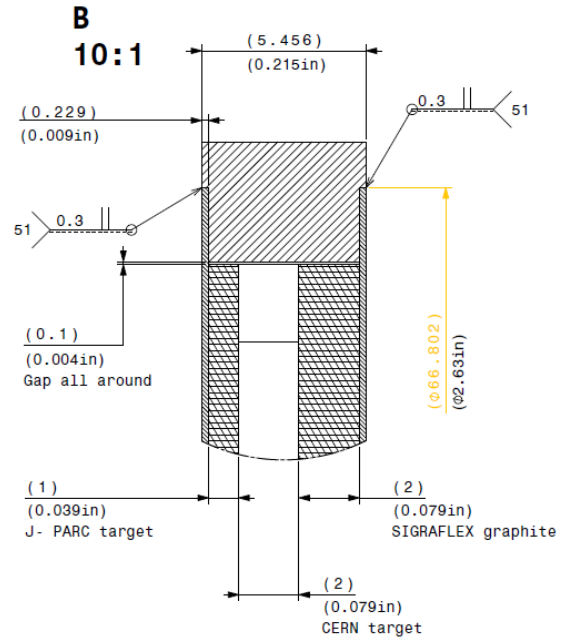

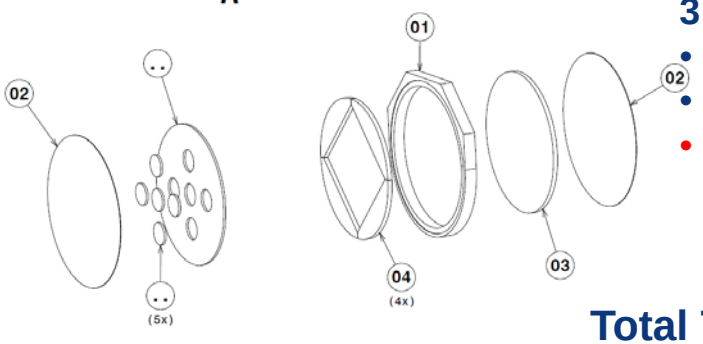

3 types/layers of Samples:

- Graphite-Si/C Coated. **1 mm thickness**
- Si samples (embedded in Si filler). **2 mm thickness**
- **+ Disk of Expanded graphite (Sigraflex)**. **2 mm thickness**

Total Thickness of the capsule would be now <u>5.456 mm</u>

Addition of Expanded Graphite (SigraFlex) Samples

- Expanded Graphite -> 2 mm thickness
- Density = 1 gr/cm3

With this configuration the peak energy will be reduced by 1 MeV

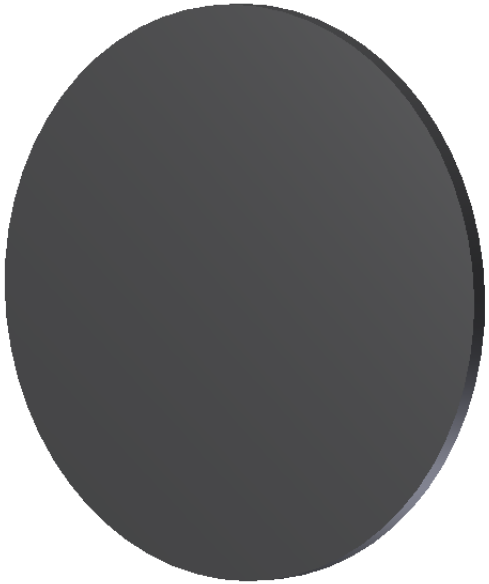

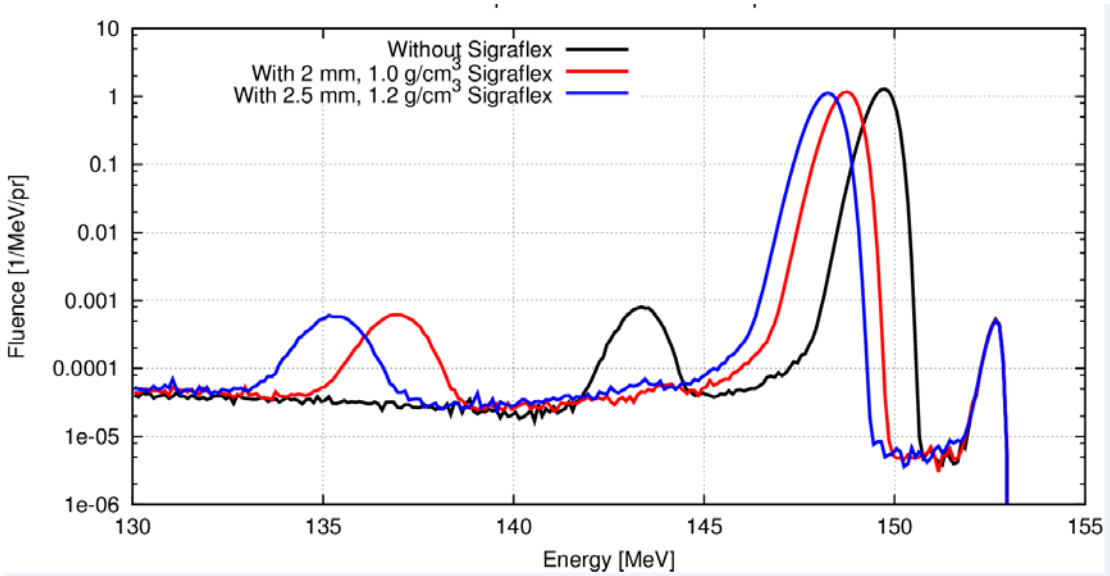

Update on Graph-SiC coated Samples

Two types of samples in form of disks:

- Samples Toyotanso
  - 0.76 mm graphite, density; 1.85 g/cc
  - 0.12 mm SiC coating both sides, density; 3.2 g/cc
  - 3 samples (center and 2 samples), **effective density; 2.17 g/cc.**
- Samples Ibiden
  - 0.82 mm graphite, density; 1.75 g/cc
  - 0.09 mm SiC coating both sides, density; 3.2 g/cc
  - 2 samples, **effective density; 2.01 g/cc**
- **Filler:** IG-430U (Toyotanso). **density; 1.82g/cc**

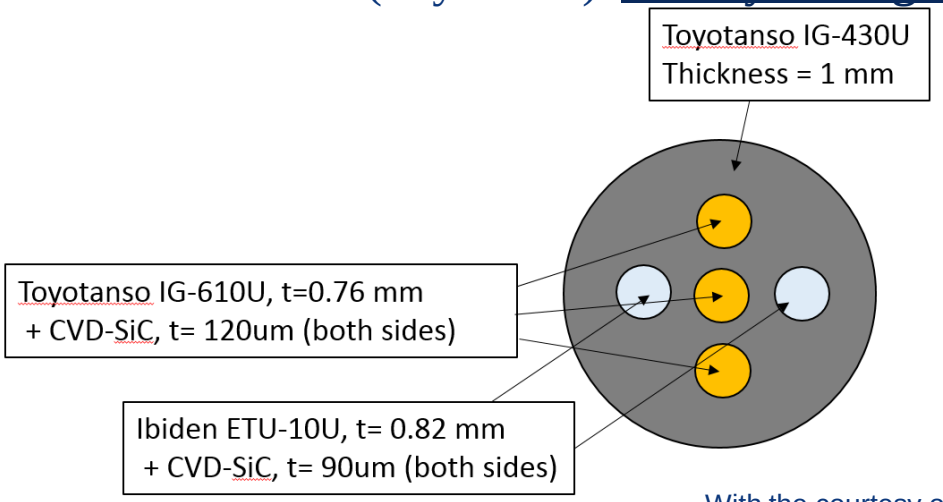

Tolerances between Sample disks and Filler:
+0.05 mm ~ +0.1 mm

With the courtesy of Makimura San

Update on Thermo-mechanical Calculations of Low Density Capsule

Temperatures

Max T Si samples = 480 ºC
Max T Graph/SiC samples = 420 ºC
Max T Sigraflex = 170 ºC

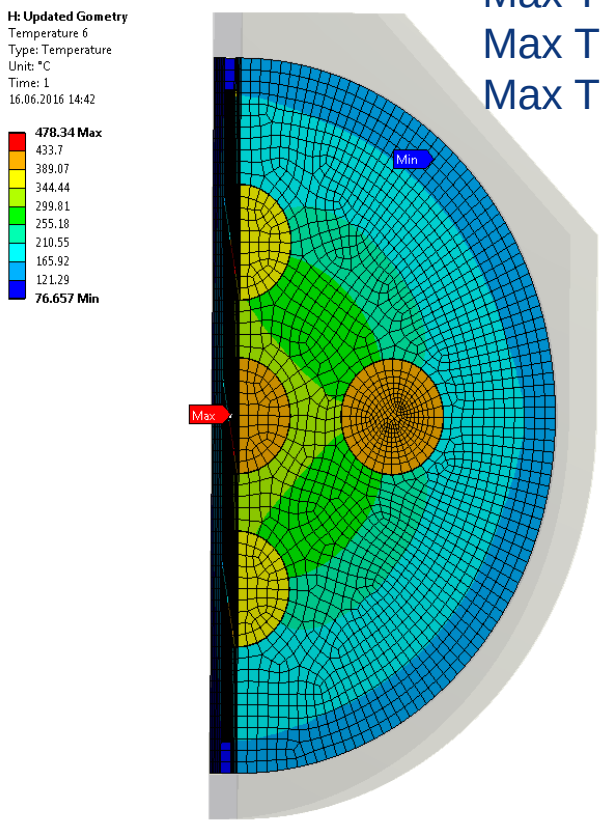

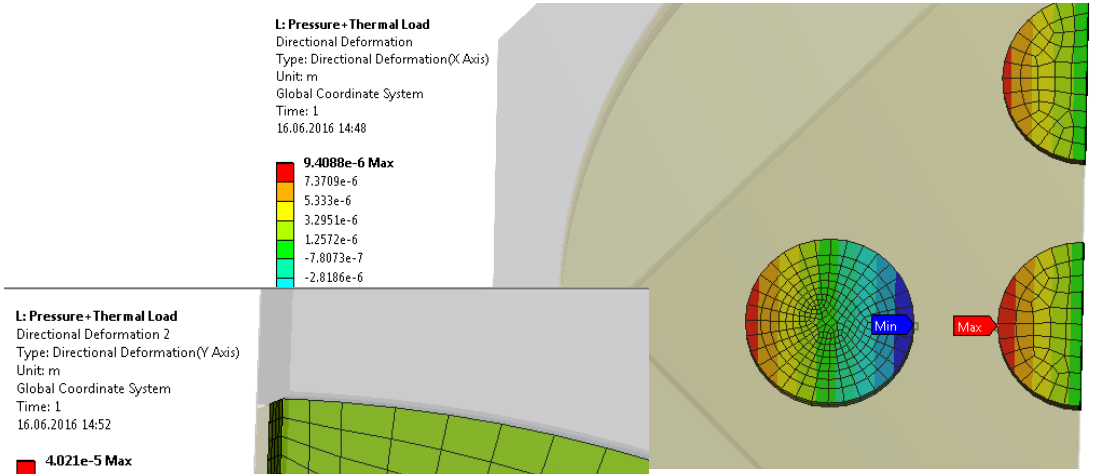

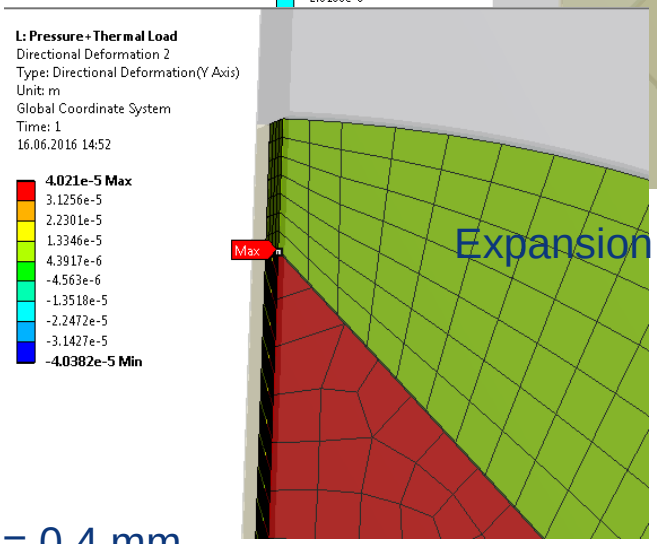

Expansion of the disks = 10 um

Expansion Si Samples = 0.4 mm

Detailed Design of the Specimens

CERN Capsule design – Samples configuration

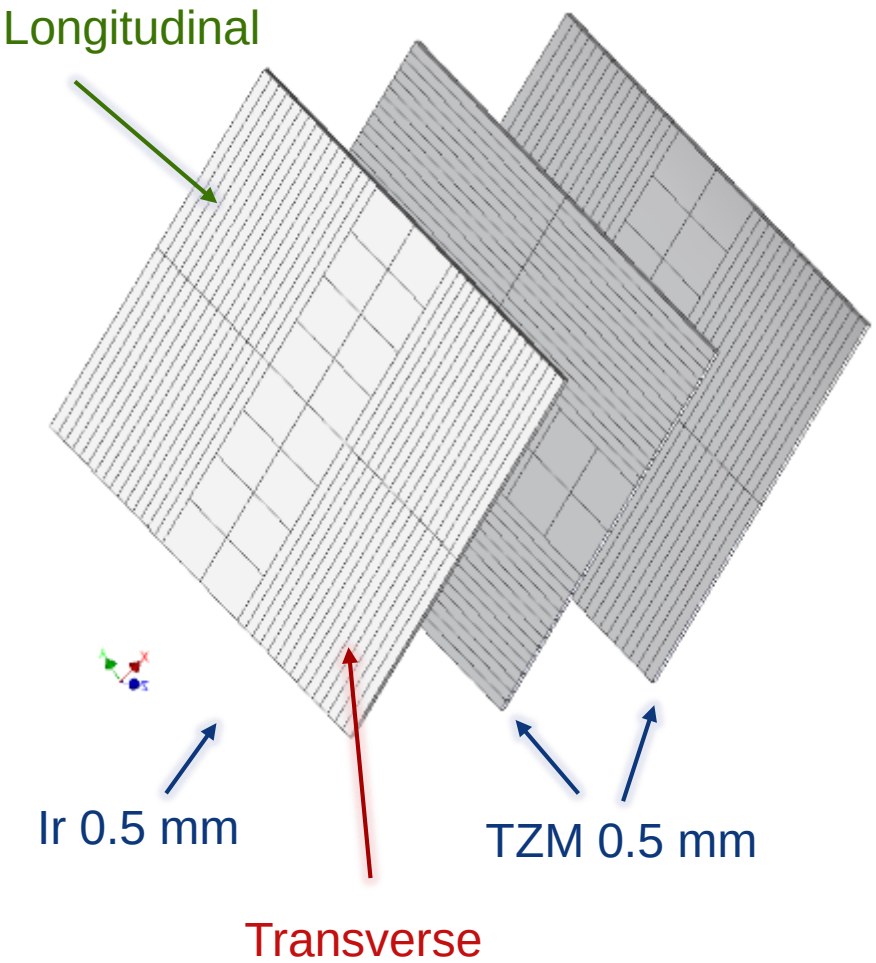

- Main interest: tensile strength and DBTT of Ir and TZM with dpa and temperature
- 2 tests foreseen: 4P-bending crosscheck with shear point tests
- Number of samples still to determined depending on availability of temperature test
- Questions: Details of the PIE tests? Cost of shipping? Etc.
- Final configuration to be determined

N° of samples	4P-BT	SPT
Ir	60	16
TZM	120	32

Optical microscopy on Ir

5. Ir 0,5 – SAMPLE 1:

	SOI-1	SOI-2
500x		

6. Ir 0,5 – SAMPLE 2:

	SOI-1	SOI-2
500x		

With the courtesy of Laura G. Pereira

Optical microscopy on TZM

3. TZM 0,52 – SAMPLE 1:

	400 x	1 Kx
SOI-1		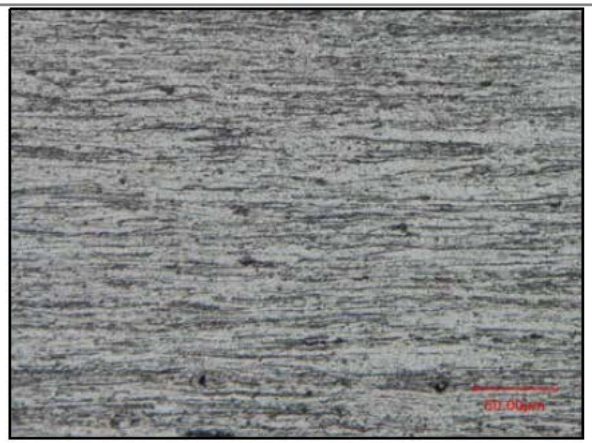
SOI-2		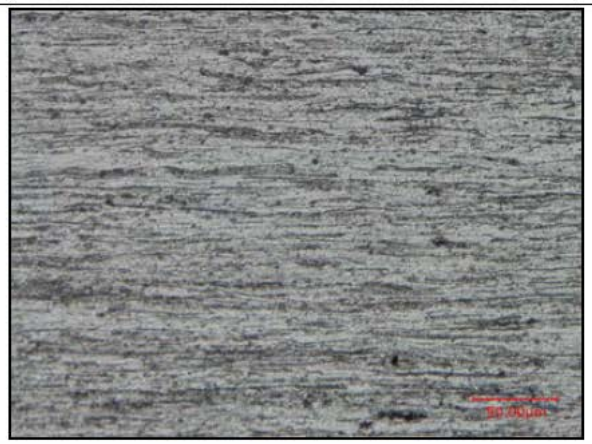

With the courtesy of Laura G. Pereira

Conclusions

- Detailed Designs of CERN Capsules is on going. Main changes in Heavy Density Capsule:
  - Use of a SS mask in the vacuum degrader 1.71 mm thickness
  - Addition of pins and change of external capsule to be rotationally fixed
  - Addition of 0.1 mm expanded graphite foil
- Main changes in Low Density Capsule
  - Change of external capsule shape (same as Heavy capsule)
  - Addition of +2 mm thickness samples of Sigraflex
  - Total size thickness of the capsule = 5.456 mm